AN AUDIO-VISUAL SPEECH SEPARATION NETWORK WITH JOINT CROSS-ATTENTION AND ITERATIVE MODELING

Fangxu Chen[1,2] *Ying Hu*[1,2,*] *Zhijian Ou*[3] *Hexin Liu*[4]

[1] Joint International Research Laboratory of Silk Road Multilingual Cognitive Computing, China
[2] School of Computer Science and Technology, Xinjiang University, China
[3] Department of Electrical Engineering, Tsinghua University, China
[4] School of Electrical and Electronic Engineering, Nanyang Technological University, Singapore

ABSTRACT

Audio-visual speech separation (AVSS) aims to extract the target speech signal from a speech mixture by leveraging audio and visual cues. In this paper, we propose an AVSS network with joint cross-attention and iterative modeling, JCA-Net, which mainly comprises a joint cross-attention (JCA) module and a separation module. The JCA module is proposed for audio-visual fusion by incorporating a joint representation of different modalities into the cross-attention mechanism, effectively leveraging inter-modal relationships while maintaining focus on intra-modal relationships. In addition, the separation module is iteratively performed with shared parameters, and the choice of iteration number involves a trade-off between performance and efficiency. Experiments show that JCA-Net achieves superior separation performance while balancing efficiency. Code will be available at `https://github.com/fxuchen/JCA-Net`.

***Index Terms*—** audio-visual, speech separation, attention, iterative modeling

1. INTRODUCTION

With the rapid advancement of speech processing and artificial intelligence technologies, speech separation has made remarkable progress. However, audio-only speech separation methods [1, 2] face limitations in scenarios with strong background noise, reverberation, or heavy voice overlap. Motivated by the human ability to process multisensory information [3], researchers have proposed speech separation methods that integrate visual cues [4, 5, 6, 7], which are termed audio-visual speech separation (AVSS).

The AVSS frameworks typically have two essential modules: audio-visual (AV) fusion and separation modules, where the AV fusion module generally adopts the process of concatenation [4], addition [6] or attention-based fusion [8], among which the attention-based fusion has been verified to be more effective. Pegg et al. proposed a cross-dimensional attention by a multi-head attention (MHA) strategy to fuse the visual cues of the target speaker and the audio features of that [8]. Lin et al. proposed to adopt a cross-modal MHA for AV fusion [5]. However, these methods only focus on the inter-modal relationships and ignore intra-modal ones [9].

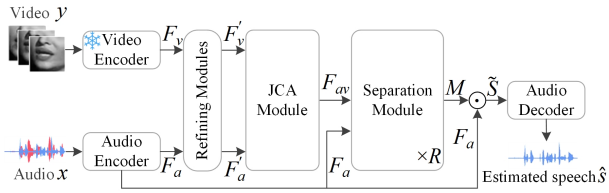

Fig. 1. The framework of our proposed JCA-Net with joint cross-attention (JCA) and iterative modeling. R and $\odot$ denote the number of iterations and element-wise multiplication.

The separation module plays a crucial role in speech separation. Many researchers have proposed designing the separation module equipped with convolutional neural networks [10], recurrent neural networks [8] or Transformers [5, 11]. The Transformer-style dual-path networks [5, 11] achieve promising separation performance. However, they often have a large model size and slow inference speed, making them unsuitable for flexible cross-environment applications.

To address the above issues, we propose an AVSS network with **J**oint **C**ross-**A**ttention and iterative modeling (JCA-Net), which considers both intra- and inter-modal correlations for AV fusion and uses an iterative separation module with shared parameters. The main contributions are as follows:

i) We propose a Joint Cross-Attention (JCA) module to extract the salient features across AV modalities by introducing a joint representation of AV modalities, which enables both intra-modal self-attention and inter-modal cross-attention.

ii) We propose a separation module that adopts an iterative manner with shared parameters, thereby balancing performance and efficiency.

*Corresponding Author. This work is supported by the Open Research Fund Program of Beijing National Research Center for Information Science and Technology (04410307724) and Central Guidance Local Science and Technology Development Fund (ZYYD2025JD10).

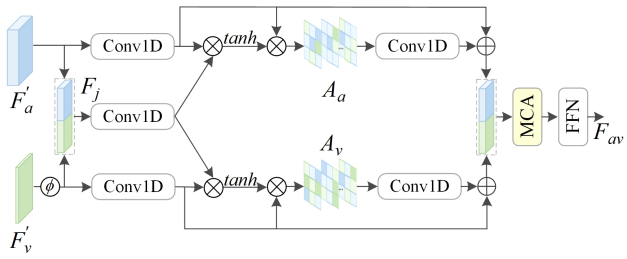

Fig. 2. The structural diagram of JCA module. ϕ, $\otimes$ and $\oplus$ denote the operations of alignment, matrix multiplication and addition, respectively. Conv1D and MCA denote the convolution operation with the kernel size of 1×1, and moment channel attention [12], respectively.

2. METHOD

Our proposed JCA-Net includes audio and video encoders, refining modules, a joint cross-attention (JCA) module, R stacked separation modules, and an audio decoder, as illustrated in Fig. 1. For each pair of samples, a mixed audio signal x and the corresponding speaker's lip movement y are firstly fed into audio and video encoders for extracting audio and visual features, F_a and F_v, respectively. They are then refined by two specific refining modules to get refined embeddings of two modalities, F_a' and F_v'. The JCA module takes F_a' and F_v' as inputs to generate the multimodal features F_{av}. Subsequently, F_{av} and F_a are jointly fed into R stacked separation modules, where each separation module shares parameters, ultimately yielding an estimated mask M. Following the approach of RTFSNet [8], the target speaker's audio embedding $\tilde{S}$ is obtained by performing element-wise multiplication in the complex domain. $\tilde{S}$ is finally converted into a time-domain waveform using the audio decoder, yielding the estimated speech of the target speaker $\hat{s}$.

2.1. Encoders and Refining Modules

We employ the pretrained CTCNet-Lip [6] model as a video encoder to extract the visual features, $F_v \in \mathbb{R}^{C_v \times T_v}$, from the corresponding speaker's lip movement, $y \in \mathbb{R}^{1 \times T_v \times H \times W}$, where C_v and T_v denote the number of channels and time frames, and H and W the height and width of video frames. For the audio encoder, the mixed audio $x \in \mathbb{R}^{1 \times L_a}$, where L_a denotes the length of the audio signal, is processed by the Short-Time Fourier Transform (STFT) to obtain the complex spectrogram. The real and imaginary parts are then concatenated along the channel dimension and fed into a 2D convolution layer with the kernel size of 3×3 and C_a output channels to obtain the audio features $F_a \in \mathbb{R}^{C_a \times T_a \times F}$, where C_a, T_a and F denote the number of channels, time frames and frequency bins, respectively.

The visual and audio features, F_v and F_a, are fed into visual and audio refining modules, respectively, to obtain the enhanced visual and audio embeddings, $F_v' \in \mathbb{R}^{C_a \times T_v}$ and $F_a' \in \mathbb{R}^{C_a \times T_a \times F}$. The visual refining module is a modified version of the TDANet [8], while the audio refining module is a single separation module defined in Section 2.3.

2.2. Joint Cross-Attention Module

We propose the Joint Cross-Attention (JCA) module to fuse the salient features across audio-visual (AV) modalities by introducing a joint representation, which enables both intra-modal self-attention and inter-modal cross-attention, as shown in Fig. 2.

Considering the differences of temporal scale between the visual and audio embeddings[13], we utilize the nearest neighbor interpolation and broadcast mechanism to align F_v' and F_a'. Subsequently, the joint representation of AV modalities, $F_j \in \mathbb{R}^{C_a \times T_a \times F}$, is obtained by a concatenation of F_v' and F_a' along the channel dimension and linear layer. The joint correlation matrices, M_a and M_v, which are obtained by crossing the audio embedding F_a' and joint representation F_j, as well as the visual embedding F_v' and joint representation F_j, respectively, are calculated as follows:

$$M_a, M_v = \tanh(\frac{F_j W_{ja} F_a'^T}{\sqrt{d}}), \tanh(\frac{F_j W_{jv} F_v'^T}{\sqrt{d}}) \quad (1)$$

where $W_{ja}, W_{jv} \in \mathbb{R}^{d \times d}$ denote the learnable weight matrices of Conv1D, and T and d denote the transpose operation and feature dimension, respectively. M_a and M_v can both reflect intra-modal self-attention and inter-modal cross-attention, which will be used to compute attention maps.

The attention maps of audio and visual modalities, A_a and A_v, are respectively given by A_a = ReLU($M_a W_{ma} F_a'$), A_v = ReLU($M_v W_{mv} F_v'$), where $W_{ma} \in \mathbb{R}^{T_a \times T_a}$ and $W_{mv} \in \mathbb{R}^{T_a \times T_a}$ denote the learnable weight matrices of Conv1D. The attention features of both modalities, $F_{att,a}' \in \mathbb{R}^{C_a \times T_a \times F}$ and $F_{att,v}' \in \mathbb{R}^{C_a \times T_a \times F}$, are calculated as follows:

$$F_{att,a}' = A_a W_a + F_{a_{res}}' \quad (2)$$

$$F_{att,v}' = A_v W_v + F_{v_{res}}' \quad (3)$$

where $W_a \in \mathbb{R}^{d \times d}$ and $W_v \in \mathbb{R}^{d \times d}$ denote the learnable weight matrices of Conv1D. The attention features of both modalities, $F_{att,a}'$ and $F_{att,v}'$, are concatenated along the channel dimension to form the fused features, which are then fed into the moment channel attention (MCA) [12] block for recalibrating the weights of each channel, and followed by a feed-forward network (FFN) to yield the final fused AV features, $F_{av} \in \mathbb{R}^{C_a \times T_a \times F}$.

2.3. Separation Module

For the JCA-Net, the separation module is another key component besides the AV fusion module. It is applied iteratively R times with shared parameters, as shown in Fig. 3.

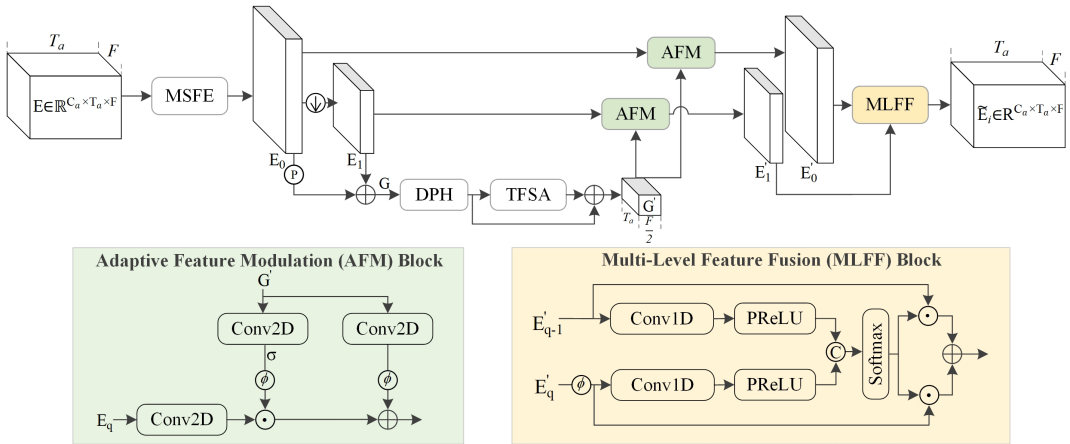

Fig. 3. The structural diagram of separation module. Ⓟ, Ⓒ and ⓓ denote the operation of pooling, concatenating along the channel dimension, downsampling, respectively. Conv2D and σ denote the 2D convolution layer with the kernel size of 3×3 and sigmoid activation function, respectively. MSFE, DPH and TFSA denote the multi-scale feature extractor [14], dual-path HOIIFormer [14] and T-F domain self-attention [1], respectively.

For the first iteration, the input E is the sum of the fused multimodal and audio features, $F_a + F_{av}$, and for the other iterations, it is the sum of the output of separation block of the previous iteration with a skip connection from the audio features, $F_a + \tilde{E}_i$, $i \in \{1, \ldots, R-1\}$. For each iteration, the input E is firstly processed by a multi-scale feature extractor (MSFE) [14] to obtain the features $E_0 \in \mathbb{R}^{C'_a \times T_a \times F}$ with reduced channel number C'_a, which is further processed by a downsampling operation to halve the frequency dimension, yielding the features $E_1 \in \mathbb{R}^{C'_a \times T_a \times \frac{F}{2}}$. Next, we adopt a pooling operation on E_0 to match the dimensions of E_1, followed by a summation operation to obtain the global features $G \in \mathbb{R}^{C'_a \times T_a \times \frac{F}{2}}$. G is then fed into a dual-path HOIIFormer (DPH) block to separately extract the inter- and intra-frame information [14], followed by a T-F domain self-attention (TFSA) to jointly extract T-F information[1], getting the features $G' \in \mathbb{R}^{C'_a \times T_a \times \frac{F}{2}}$. G' will be used to help to modulate the intermediate features, E_q, where $q \in \{0, 1\}$, by two proposed Adaptive Feature Modulation (AFM) blocks. The AFM block includes three Conv2D, each of them consists of a 2D convolution layer with the kernel size of 3 × 3 and PReLU. Among these, one Conv2D together with a sigmoid function is used for weighting the corresponding features of E_q which is processed by a Conv2D. One Conv2D is used for residual connection with the weighted features.

The outputs of two AFM blocks, $E'_q \in \mathbb{R}^{C'_a \times T_a \times \frac{F}{2^q}}$, $q \in \{0, 1\}$, are served as the inputs of the proposed Multi-Level Feature Fusion (MLFF) block, and separately processed by a Conv1D and PReLU. Subsequently, the two resulting features are concatenated, weighted by a softmax function, and aggregated through weighted summation to fuse two inputs of MLFF block. The output of MLFF, $\tilde{E}_i \in \mathbb{R}^{C_a \times T_a \times F}$, keeps the same dimension with F_a. The above procedure is iteratively repeated R times, each with shared parameters, to finally yield a mask matrix $M \in \mathbb{R}^{C_a \times T_a \times F}$ by a 2D convolution layer with a 1×1 kernel followed by ReLU.

2.4. Decoder

We then adopt the complex multiplication strategy of the S^3 block in RTFSNet[8] for audio feature reconstruction, getting the masked speech feature $\tilde{S} \in \mathbb{R}^{C_a \times T_a \times F}$. Next, $\tilde{S}$ is passed through a transposed 2D convolution with the kernel size of 3×3 and number of output channels of 2. Mirroring the encoder, we treat the first and second channels as the real and imaginary parts to form a complex spectrogram, which is then processed by the iSTFT to reconstruct the estimated target speaker's speech waveform $\hat{s} \in \mathbb{R}^{1 \times L_a}$.

3. EXPERIMENTS

3.1. Datasets and Experimental Setup

We conducted the experiments on three publicly available AVSS datasets: LRS2 [15], LRS3 [16], VoxCeleb2 [17] and the same data preprocessing as [8]. Each audio segment has a length of 2 s and a sampling rate of 16 kHz. The mixture audio was created by randomly selecting two different speakers and mixing their speeches with the signal-to-noise ratios of $[-5, 5]$ dB. The videos were synchronized with the audio to maintain a frame rate of 25 FPS, and the lip region from each frame was cropped into 96×96 grayscale images.

We performed the STFT with the Hann window of 512 points and hop length of 128 points. During the training phase, we adopted the AdamW optimizer, dynamic learning rate strategy, early stopping strategy and maximum epoch of 200 [8]. The loss function was defined as SI-SNR [21] between the predicted and target speech signals. Separation per-

Table 1. Comparison of our proposed JCA-Net with seven AVSS methods on the LRS2, LRS3 and VoxCeleb2 datasets. T and T-F denote the time and time-frequency domains, respectively. The score in bold denotes the best performance, and the underlined one denotes the second-best.

Methods	Domain	LRS2			LRS3			VoxCeleb2			Params (M)	RTF (s)	Publication
		SI-SNRi	SDRi	PESQ	SI-SNRi	SDRi	PESQ	SI-SNRi	SDRi	PESQ			
AV-Convtasnet [10]	T	12.5	12.8	2.69	11.2	11.7	2.58	9.2	9.8	2.17	16.45	0.060	ASRU'19
VisualVoice [4]	T-F	11.5	11.8	2.78	9.9	10.3	2.13	9.3	10.2	2.45	77.8	0.130	CVPR'21
AVLIT [18]	T	12.8	13.1	2.56	13.5	13.6	2.78	9.4	9.9	2.23	5.8	0.053	INTERSPEECH'23
CTCNet [6]	T	14.3	14.6	3.08	17.4	17.5	3.24	11.9	13.1	3.00	7.0	0.110	TPAMI'24
RTFS-Net-12 [8]	T-F	14.9	15.1	3.07	17.5	17.6	**3.25**	12.4	13.6	3.00	**0.74**	0.055	ICLR'24
MAFF,teacher [19]	T	12.7	12.3	-	14.5	14.7	-	8.8	9.4	-	25.8	-	TASLP'25
SEANet [20]	T	13.1	13.5	2.25	-	-	-	12.8	13.1	2.34	8.7	-	TASLP'25
JCA-Net-4†	T-F	14.2	14.4	3.02	15.5	15.7	3.07	11.3	12.2	2.89	1.26	**0.021**	-
JCA-Net-8†	T-F	15.1	15.3	3.11	17.0	17.3	3.20	12.2	13.4	3.00	1.26	0.036	-
JCA-Net-12†	T-F	**15.6**	**15.9**	**3.14**	**17.7**	**17.9**	**3.25**	**12.9**	**13.8**	**3.03**	1.26	0.049	-

JCA-Net-$R^\dagger$ denotes that the separation module in JCA-Net is operated in an iterative manner R times, where $R \in \{4, 8, 12\}$.

Table 2. Exploration of the number of iterations for the separation module in JCA-Net on the LRS2 dataset.

R	LRS2			Params (M)	MACs (G)	RTF (s)
	SI-SNRi	SDRi	PESQ			
2	13.2	13.5	3.00	1.26	46.65	0.015
4	14.2	14.4	3.02	1.26	87.14	0.021
6	14.7	14.9	2.99	1.26	127.63	0.033
8	15.1	15.3	3.11	1.26	168.12	0.036
10	15.3	15.5	3.09	1.26	208.61	0.042
12	15.6	15.9	3.14	1.26	249.10	0.049

Table 3. Ablation study of fusion strategies on the LRS2 dataset.

Fusion Strategy	LRS2		Params (M)
	SI-SNRi	SDRi	
Addition	13.4	13.7	1.22
Concatenation	13.6	13.8	1.22
Cross-attention	13.8	14.0	1.73
CAF[8]	13.6	13.9	1.23
JCA(ours)	**14.2**	**14.4**	1.26

formance was evaluated using SDRi [8], SI-SNR improvement (SI-SNRi) [21], STOI [14] and PESQ [22]. We also reported the parameter count (Params), multiply-accumulate operations (MACs), and Real-Time Factor (RTF), which is the time required to process an audio segment of 1 second on an NVIDIA RTX 3090 GPU. All models were trained on 4 NVIDIA A40 GPUs with the batch size of 4.

3.2. Comparison with Existing Methods

We compared the proposed JCA-Net with seven state-of-the-art (SOTA) AVSS methods on three datasets, as shown in Table 1. JCA-Net-4 satisfies the criterion for real-time processing. JCA-Net-12 achieves the best performance on three datasets. In particular, JCA-Net has an absolute advantage in inference speed. One can make a trade-off between performance and efficiency when choosing JCA-Net-R models for flexible cross-environment applications.

Table 4. Ablation study of two key components in the separation module on the LRS2 dataset.

AFM	MLFF	SI-SNRi	SDRi	STOI
✗	✗	13.6	13.9	0.934
✓	✗	14.0	14.2	0.939
✗	✓	13.8	14.0	0.935
✓	✓	**14.2**	**14.4**	**0.944**

3.3. Ablation Study

We conducted a series of ablation studies on the number of iterations of the separation module, fusion strategies for AV modalities and two key blocks in the separation module on the LRS2 dataset. The latter two ablation studies were conducted using the JCA-Net-4 model.

Table 2 shows that as the number of iterations of the separation module increases, the scores of SI-SNRi, SDRi, and PESQ metrics all increase, indicating an overall performance improvement, whereas the MACs and RTF increase in an approximately linear manner.

Table 3 shows that the proposed joint cross-attention (JCA) module outperforms other fusion strategies including the cross-dimensional attention fusion (CAF) [8].

Table 4 shows the ablation results of AFM and MLFF in the separation module. The JCA-Net incorporating AFM can increase the scores of SI-SNRi and SDRi to 14.0 dB and 14.2 dB, respectively, while incorporating MLFF solely also improves all three metrics. The combination of AFM and MLFF achieves the best separation performance.

4. CONCLUSION

In this work, we propose the JCA-Net for AVSS, where the JCA module fuses AV information by exploiting intra- and inter-modal relationships, and the separation module is performed in an iterative manner. Experimental results verify that our proposed JCA-Net-12 achieves the best performance on three datasets, compared with seven SOTA AVSS methods.

5. REFERENCES

[1] Zhong-Qiu Wang, Samuele Cornell, Shukjae Choi, Younglo Lee, Byeong-Yeol Kim, and Shinji Watanabe, "Tf-gridnet: Integrating full-and sub-band modeling for speech separation," *IEEE/ACM Transactions on Audio, Speech, and Language Processing*, vol. 31, pp. 3221–3236, 2023.

[2] Mohan Xu, Kai Li, Guo Chen, and Xiaolin Hu, "Tiger: Time-frequency interleaved gain extraction and reconstruction for efficient speech separation," in *ICLR*, 2025.

[3] Nima Mesgarani and Edward F Chang, "Selective cortical representation of attended speaker in multi-talker speech perception," *Nature*, vol. 485, no. 7397, pp. 233–236, 2012.

[4] Ruohan Gao and Kristen Grauman, "Visualvoice: Audio-visual speech separation with cross-modal consistency," in *2021 IEEE/CVF Conference on Computer Vision and Pattern Recognition (CVPR)*. IEEE, 2021, pp. 15490–15500.

[5] Jiuxin Lin, Xinyu Cai, Heinrich Dinkel, Jun Chen, Zhiyong Yan, Yongqing Wang, Junbo Zhang, Zhiyong Wu, Yujun Wang, and Helen Meng, "Av-sepformer: Cross-attention sepformer for audio-visual target speaker extraction," in *Proc. ICASSP*. IEEE, 2023.

[6] Kai Li, Fenghua Xie, Hang Chen, Kexin Yuan, and Xiaolin Hu, "An audio-visual speech separation model inspired by cortico-thalamo-cortical circuits," *IEEE Transactions on Pattern Analysis and Machine Intelligence*, vol. 46, no. 10, pp. 6637–6651, 2024.

[7] Zhaoxi Mu and Xinyu Yang, "Separate in the speech chain: Cross-modal conditional audio-visual target speech extraction," in *IJCAI*, 2024.

[8] Samuel Pegg, Kai Li, and Xiaolin Hu, "Rtfs-net: Recurrent time-frequency modelling for efficient audio-visual speech separation," in *ICLR*, 2024.

[9] R Gnana Praveen, Patrick Cardinal, and Eric Granger, "Audio–visual fusion for emotion recognition in the valence–arousal space using joint cross-attention," *IEEE Transactions on Biometrics, Behavior, and Identity Science*, vol. 5, no. 3, pp. 360–373, 2023.

[10] Jian Wu, Yong Xu, Shi-Xiong Zhang, Lian-Wu Chen, Meng Yu, Lei Xie, and Dong Yu, "Time domain audio visual speech separation," in *2019 IEEE automatic speech recognition and understanding workshop (ASRU)*. IEEE, 2019, pp. 667–673.

[11] Vahid Ahmadi Kalkhorani, Anurag Kumar, Ke Tan, Buye Xu, and DeLiang Wang, "Time-domain transformer-based audiovisual speaker separation," in *INTERSPEECH*, 2023.

[12] Yangbo Jiang, Zhiwei Jiang, Le Han, Zenan Huang, and Nenggan Zheng, "Mca: Moment channel attention networks," in *Proceedings of the AAAI Conference on Artificial Intelligence*, 2024, vol. 38, pp. 2579–2588.

[13] Wendi Sang, Kai Li, Runxuan Yang, Jianqiang Huang, and Xiaolin Hu, "A fast and lightweight model for causal audio-visual speech separation," in *ECAI*, 2025.

[14] Wenbing Wei, Ying Hu, Hao Huang, and Liang He, "Iifc-net: A monaural speech enhancement network with high-order information interaction and feature calibration," *IEEE Signal Processing Letters*, vol. 31, pp. 196–200, 2023.

[15] Triantafyllos Afouras, Joon Son Chung, Andrew Senior, Oriol Vinyals, and Andrew Zisserman, "Deep audio-visual speech recognition," *IEEE transactions on pattern analysis and machine intelligence*, vol. 44, no. 12, pp. 8717–8727, 2018.

[16] Triantafyllos Afouras, Joon Son Chung, and Andrew Zisserman, "Lrs3-ted: a large-scale dataset for visual speech recognition," *CoRR,abs/1809.00496*, 2018.

[17] Joon Son Chung, Arsha Nagrani, and Andrew Zisserman, "Voxceleb2: Deep speaker recognition," in *INTERSPEECH*, 2018.

[18] Héctor Martel, Julius Richter, Kai Li, Xiaolin Hu, and Timo Gerkmann, "Audio-visual speech separation in noisy environments with a lightweight iterative model," in *INTERSPEECH*, 2023.

[19] Cunhang Fan, Wang Xiang, Jianhua Tao, Jiangyan Yi, and Zhao Lv, "Cross-modal knowledge distillation with multi-stage adaptive feature fusion for speech separation," *IEEE Transactions on Audio, Speech and Language Processing*, 2025.

[20] Ruijie Tao, Xinyuan Qian, Yidi Jiang, Junjie Li, Jiadong Wang, and Haizhou Li, "Audio-visual target speaker extraction with selective auditory attention," *IEEE Transactions on Audio, Speech and Language Processing*, 2025.

[21] Jonathan Le Roux, Scott Wisdom, Hakan Erdogan, and John R Hershey, "Sdr–half-baked or well done?," in *Proc. ICASSP*. IEEE, 2019.

[22] Antony W Rix, John G Beerends, Michael P Hollier, and Andries P Hekstra, "Perceptual evaluation of speech quality (pesq)-a new method for speech quality assessment of telephone networks and codecs," in *Proc. ICASSP*. IEEE, 2001.